Fiberglass 30 Laboratory Hoods

Specifications & Ordering Information



Compact Fiberglass 30 Laboratory Hoods are designed for research, educational and clinical applications requiring small working space and efficient fume removal. These hoods feature a corrosion-resistant, one-piece molded fiberglass liner.

All models feature:

- By-pass airflow design
- Durable glacier white powder-coated steel exterior
- One-piece molded fiberglass interior and pre-set baffle with flame spread index less than 25 per ASTM E84
- 3/16" thick tempered safety glass vertical-rising sash with powder-coated aluminum handle
- Pivoting air foil
- Right side fixture panel factory-prepared for up to three service fixtures, one electrical duplex and one airflow monitor (kits are sold separately)
- 6.7" ID fiberglass exhaust connection

Standards conformance & regulations:

- CFR 29, Part 1910
- SEFA 1
- NFPA 45
- ASHRAE 110
- ANSI Z9.5*
- UL 61010-1
- CAN/CSA C22.2 No. 61010.1
- UL 1805
- SEFA 8
- CE Conformity Marking (230V models)**

⚠**WARNING:** Cancer - P65Warnings.ca.gov (California only)

Models 3030000 and 3030001 feature:

- Built-in corrosion-resistant, direct drive exhaust blower capable of overcoming a maximum external static pressure of 0.12" H_2O at 310 CFM (100 fpm)
- Pre-wired 100 watt, vapor-proof LED lighting, light and blower switches

Models 3030002 and 3030003:

- Designed for use with remote blower (not included)
- Static pressure loss does not exceed 0.14" H_2O at 100 fpm (310 CFM)
- Pre-wired 100 watt, vapor-proof LED lighting, light and blower switches

Models 3030004 and 3030005 feature:

- Built-in corrosion-resistant, explosion-proof, direct drive exhaust blower capable of overcoming a maximum external static pressure of 0.12" H_2O at 310 CFM (100 fpm)
- **Furnished without light, switches or wiring. Wiring must conform to local codes** (Explosion-proof Light Fixture Kit is available. See page 17.)

Required accessories (not included):

- Ductwork
- Work surface. See page 28
- Base cabinet or stand

Optional accessories for on-site installation include (see page 17):

- Service Fixture Kits
- Electrical Duplex Kits
- Guardian Airflow Monitor Kits
- Explosion-Proof Light Fixture Kit

Catalog Number	Built-in Blower	Equivalent Resistance††		Electrical Requirements	Vapor-Proof Lamp	Dimensions (w x d x h)	Shipping Weight
		6" dia.	8" dia.				
3030000	1/10 HP, Std.	20'	80'	115V, 60 Hz	100 watt	30.0" x 30.2" x 48.0" (76.2 x 76.7 x 121.9 cm)	230 lbs. (104 kg)
3030001†	1/3 HP, Std.	20'	80'	230V, 50 Hz	100 watt	30.0" x 30.2" x 52.0" (76.2 x 76.7 x 132.1 cm)	230 lbs. (104 kg)
3030002	None	—	—	115V, 60 Hz	100 watt	30.0" x 30.2" x 48.0" (76.2 x 76.7 x 121.9 cm)	210 lbs. (95 kg)
3030003†	None	—	—	230V, 50 Hz	100 watt	30.0" x 30.2" x 48.0" (76.2 x 76.7 x 121.9 cm)	210 lbs. (95 kg)
3030004	1/4 HP, EP	20'	80'	115V, 60 Hz	None	30.0" x 30.2" x 54.0" (76.2 x 76.7 x 137.2 cm)	240 lbs. (109 kg)
3030005†	1/3 HP, EP	20'	80'	230V, 50 Hz	None	30.0" x 30.2" x 54.0" (76.2 x 76.7 x 137.2 cm)	240 lbs. (109 kg)

EP = Explosion-proof

*Does not apply to models with built-in blowers.
**Contact Labconco for specific models.

†International electrical configuration
††Maximum length of straight duct to achieve 100 fpm face velocity

Fiberglass 30 Laboratory Hoods

Accessories

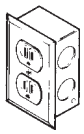

Duplex Electrical Receptacle Kits. Include duplex electrical receptacle, wiring, junction box and receptacle cover plate. For mounting on the lower right side fixture panel.

Catalog Number	Description	Shipping Weight
2834800	115V, 20A AC	4.0 lbs. (1.8 kg)
2834801	115V, 20A AC, GFCI	4.0 lbs. (1.8 kg)

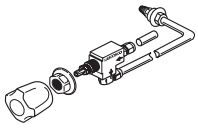

Standard Service Fixture Kits. Include one remotely-controlled service fixture with 0.25" diameter valve and tubing, color-coded fixture knob and color-coded hose connector. For mounting on the right side fixture panel. Shipping weight 4.0 lbs. (1.8 kg)

Catalog Number	Kit	Tubing	Valve	Knob/Connector Color	Max. Flow Rate	Max. Working Pressure*
2832600	Cold Water (CW)	Copper	Brass	Green	3.5 GPM (13.2 LPM)	40 psi
2832601	Hot Water (HW)	Copper	Brass	Red	3.5 GPM (13.2 LPM)	40 psi
2832602	Deionized/Distilled Water (DW)	Stainless Steel	Nickel-Plated & Stainless Steel	White	3.5 GPM (13.2 LPM)	40 psi
2832603	Vacuum (VAC)	Copper	Brass	Yellow	8.6 CFM	14.7 psi
2832604	Air (AIR)	Copper	Brass	Orange	23.7 CFM	40 psi
2832605	Gas (GAS)	Brass	Brass	Blue	29.0 CFM (441 BTU/sec)	40 psi
2832606	Nitrogen (NIT)	Copper	Brass	Brown	24.1 CFM	40 psi
2832607	Argon (ARG)	Copper	Brass	Gray	20.2 CFM	40 psi
2832608	Steam (STM)	Copper	Brass	Black	0.5 LBM/min	40 psi

GPM = gallons per minute LPM = liters per minute CFM = cubic feet per minute BTU/sec = British thermal unit per second
LBM/min = pounds mass per minute



Guardian™ 1000 Digital Airflow Monitor Kits. LCD displays average face velocity. Audible/visual alarm alerts user to low or high face velocity. For installation in a factory-prepared cutout on upper portion of right side fixture panel. Shipping weight 6.0 lbs. (2.7 kg)

Catalog Number	Description
9743201	For 115V, 60 Hz operation
9743205*	For 230V, 50 Hz operation



Guardian™ 500 Airflow Monitor Field Installation Kits. Audible/visual alarm alerts user to low face velocity. For installation in a factory-prepared cutout on upper portion of right side fixture panel. Shipping weight 6.0 lbs. (2.7 kg)

Catalog Number	Description
9743213	For 115V, 60 Hz operation
9743214*	For 230V, 50 Hz operation

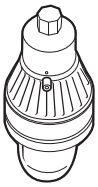

4892900—Explosion-Proof Light Fixture Kit. For mounting on Fiberglass 30 Hood 3030004 or 3030005. Includes explosion-proof incandescent/LED light fixture, mounting hardware and instructions. 13.0" h x 7.0" diameter (33.0 x 17.8 cm). 150 Watt maximum. Suitable for Class I, Group C & D and Class II, Group E & G room classifications per National Fire Protection Association (NFPA) 70. **Bulb and electrical wiring are not included.** Shipping weight 11 lbs. (5 kg)

*Maximum allowable pressure is 200 psi with a working pressure of 40 psi.
**International electrical configuration

Fiberglass 30 Laboratory Hoods

Dimensional Data

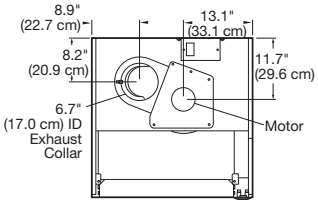

3030000
(with Built-in Blower)

TOP

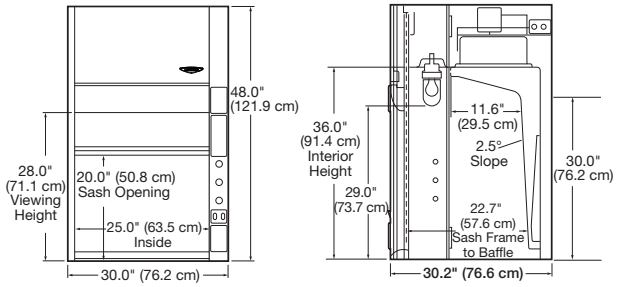

FRONT **SIDE**

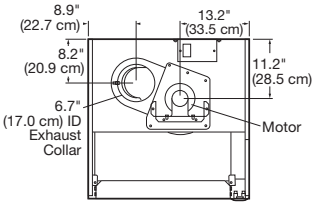

3030001
(with Built-in Blower)

TOP

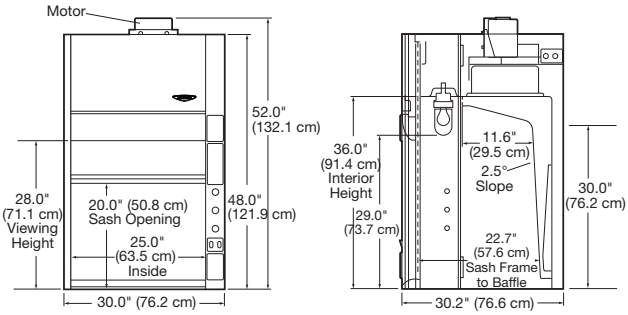

FRONT **SIDE**

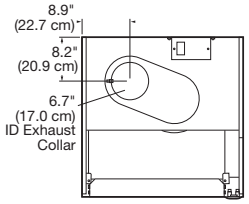

3030002 and 3030003
(for use with
Remote Blower)

TOP

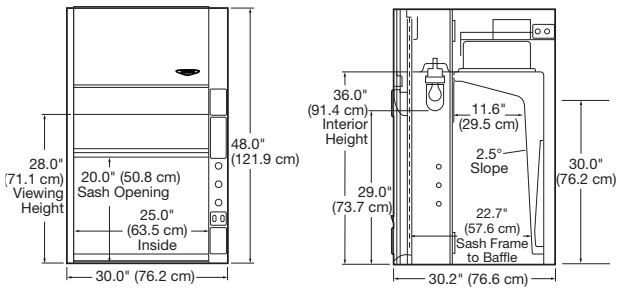

FRONT **SIDE**

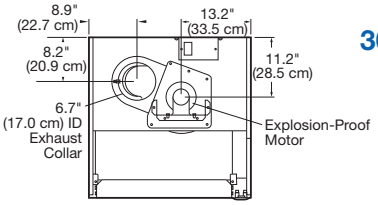

3030004 and 3030005
(with Built-in
Explosion-Proof Blower)

TOP

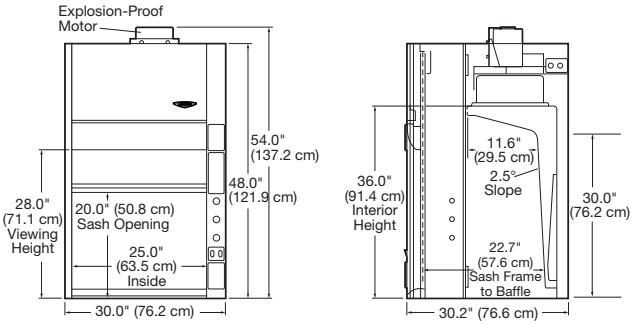

FRONT **SIDE**